1

ACADEMIC ADVISING
BURGER OFFICE
CIRCULATION & RESERVES
DULIN LEARNING CENTER
DVD COLLECTION
GENEALOGY
GOVERNMENT INFORMATION
INFORMATION COMMONS
MAP CABINETS
MARSHALL GALLERY
MEDIA SERVICE DESK
MEWS CAFE
OPEN CLASSROOM
POPULAR BOOKS
READ & RELAX
REFERENCE COLLECTION
RESEARCH DESK
SPECIAL COLLECTIONS
TRIBE TUTOR ZONE
WRITING RESOURCES CENTER

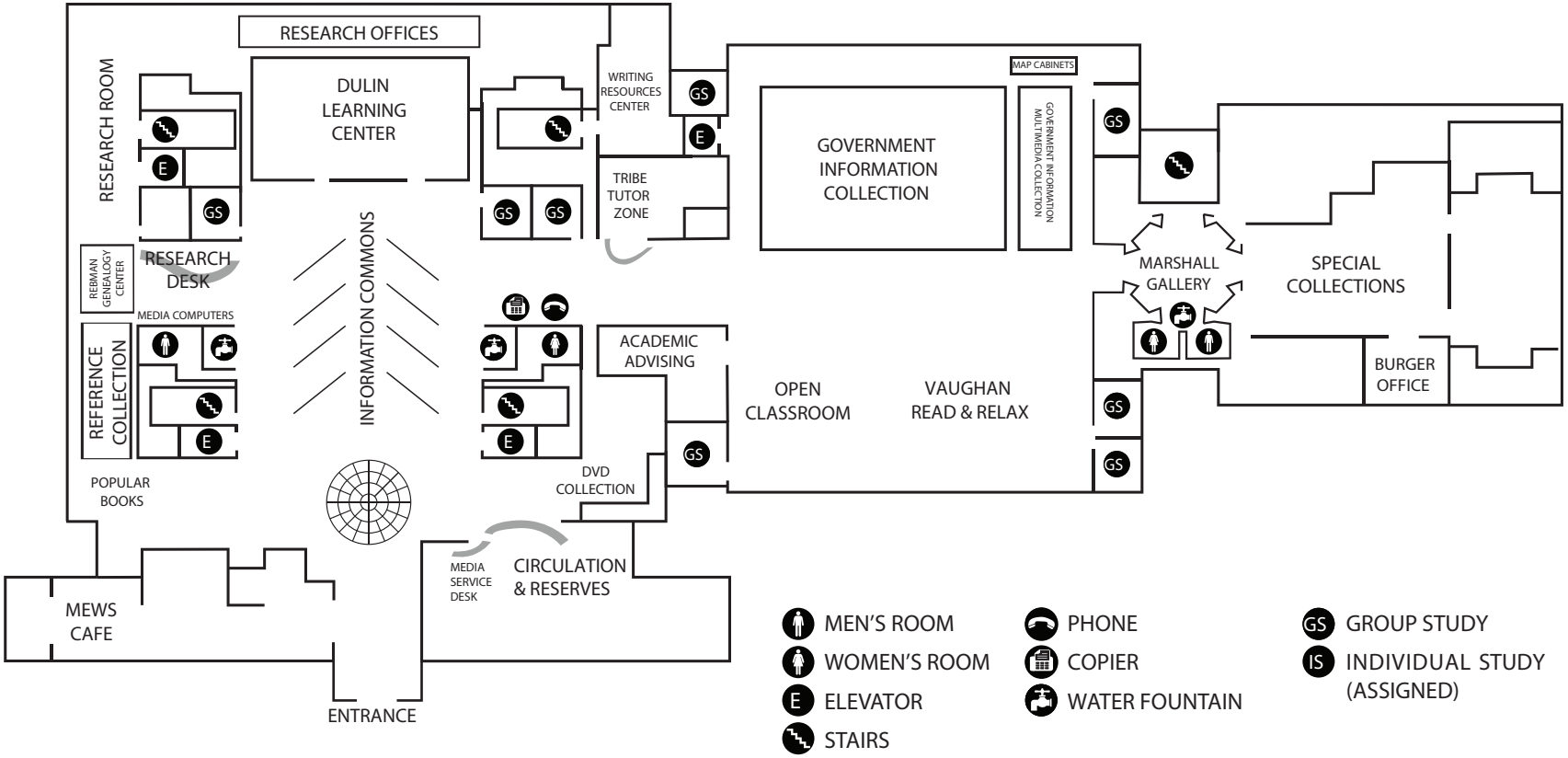

G

BOTETOURT GALLERY
BOTETOURT THEATRE
CONTENT SERVICES
COPY CENTER
INTERLIBRARY LOAN
KYLE COLLABORATION LAB
MEDIA CENTER - UNDER RENOVATION
MICROFORMS
OMOHUNDRO INSTITUTE
ROSEBERG GALLERY

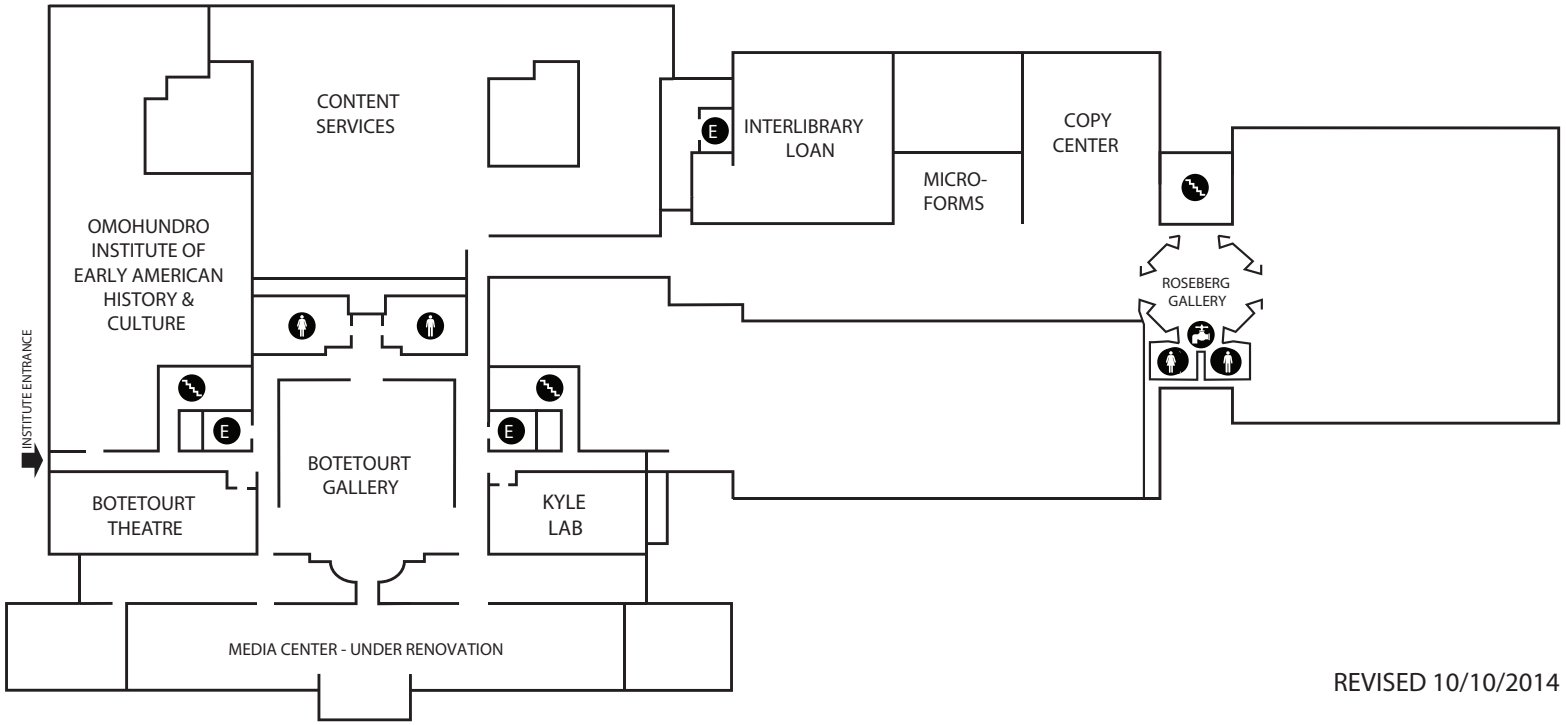

REVISED 10/10/2014

3

QUIET FLOOR

CALL NUMBERS J-Z

ADMINISTRATION
BROWN BOARD ROOM
EXTERNAL RELATIONS
GALLERY
GROUP STUDY ROOMS
INDIVIDUAL ASSIGNED STUDY ROOMS
OWEN POETRY

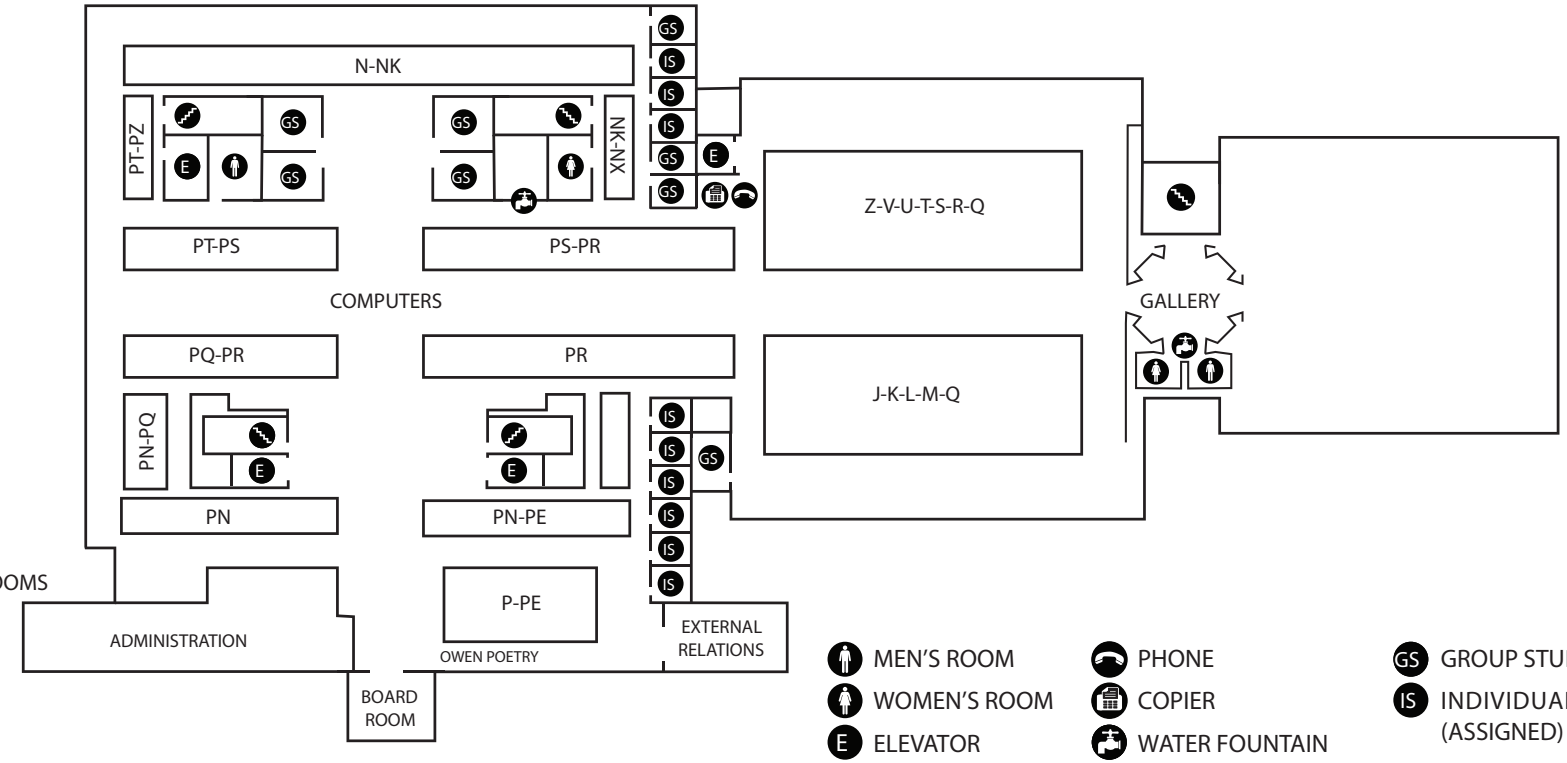

MEN'S ROOM
WOMEN'S ROOM
ELEVATOR
STAIRS
PHONE
COPIER
WATER FOUNTAIN
GROUP STUDY
INDIVIDUAL STUDY (ASSIGNED)

2

CALL NUMBERS A-H

BRIGHT GALLERY
CENTER FOR GEOSPATIAL ANALYSIS
CURRENT NEWSPAPERS
CURRENT PERIODICALS
GROUP STUDY ROOMS
INDIVIDUAL ASSIGNED STUDY ROOMS
JUVENILE COLLECTION
OVERSIZE BOOKS

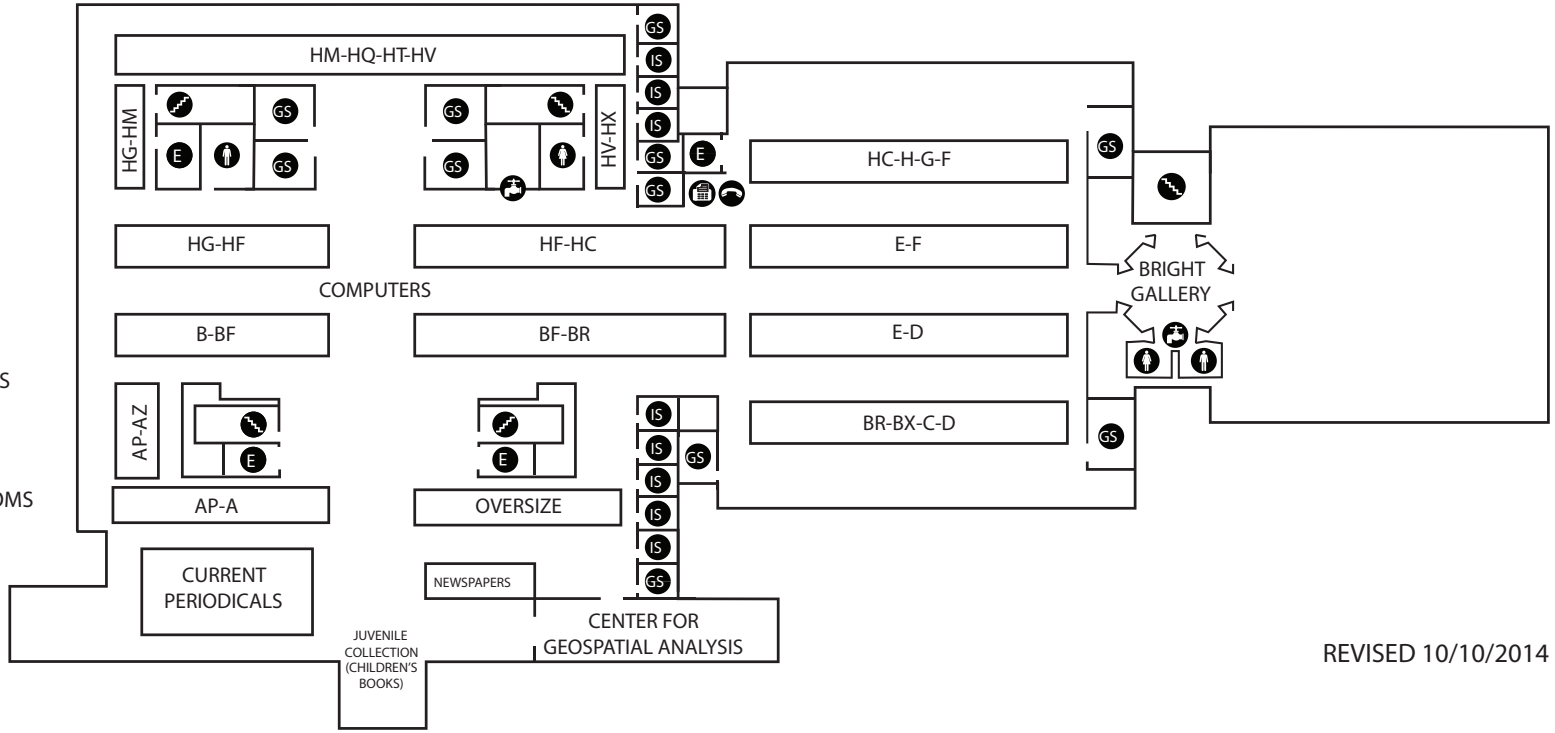

REVISED 10/10/2014